ESP32 microcontrollers

Sofia Bukreeva,
research engineer

Primary goal

To have some solution for various tasks which are not reasonable to implement with PLC, PandaBox, Electrometer, etc.

- Flexible
- Scalable
- Easy-to-use

What we have: ESP32-POE-ISO board

Made by Olimex company.

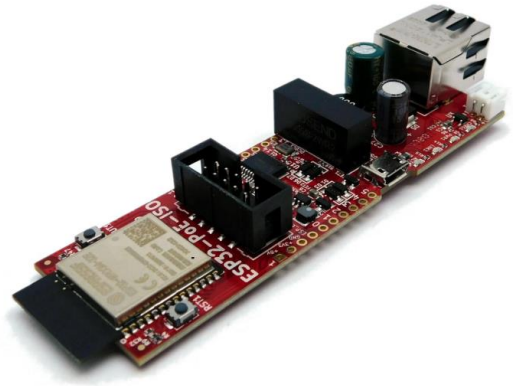

- Easy to start
- Small and cheap
- Power over Ethernet
- General serial interfaces like SPI, I2C, UART
- 12 GPIOs (+4 input only)
- Bluetooth/Wi-Fi
- USB-UART for flashing the firmware/communicating/powering

What is ESP32:

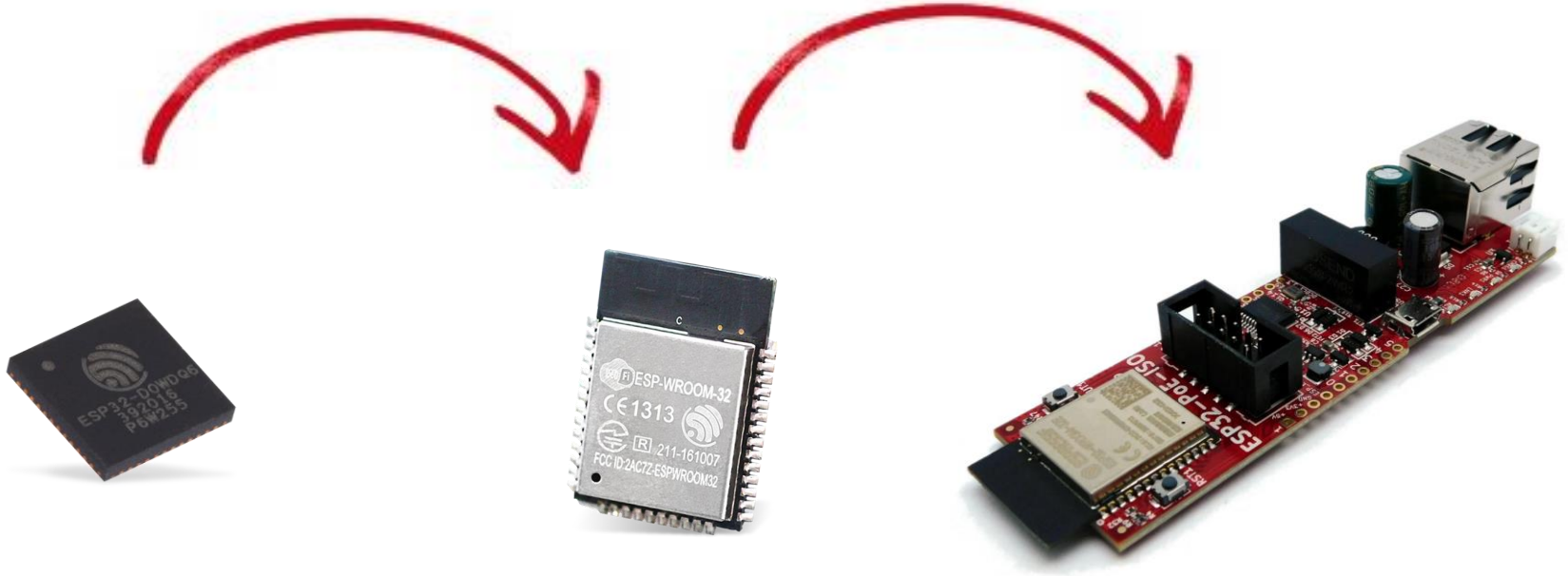

ESP32-D0WD-V3
SoC

ESP32-WROOM-32E
Module

ESP32-POE-ISO
Board

What is ESP32:

ESP32 SoC

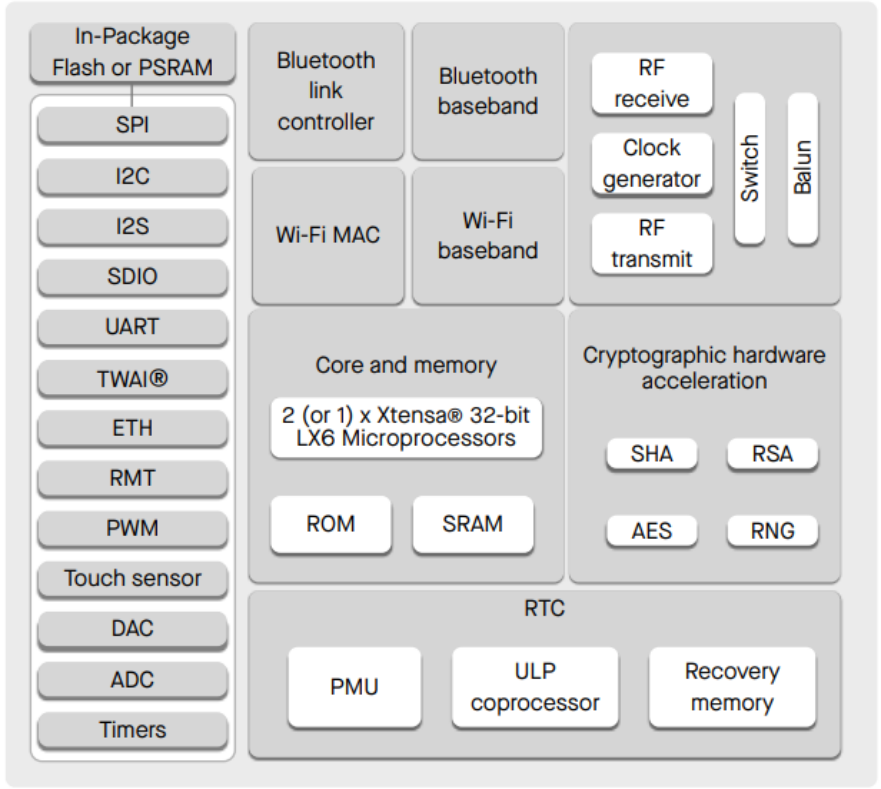

*No Flash/PSRAM

ESP32 module

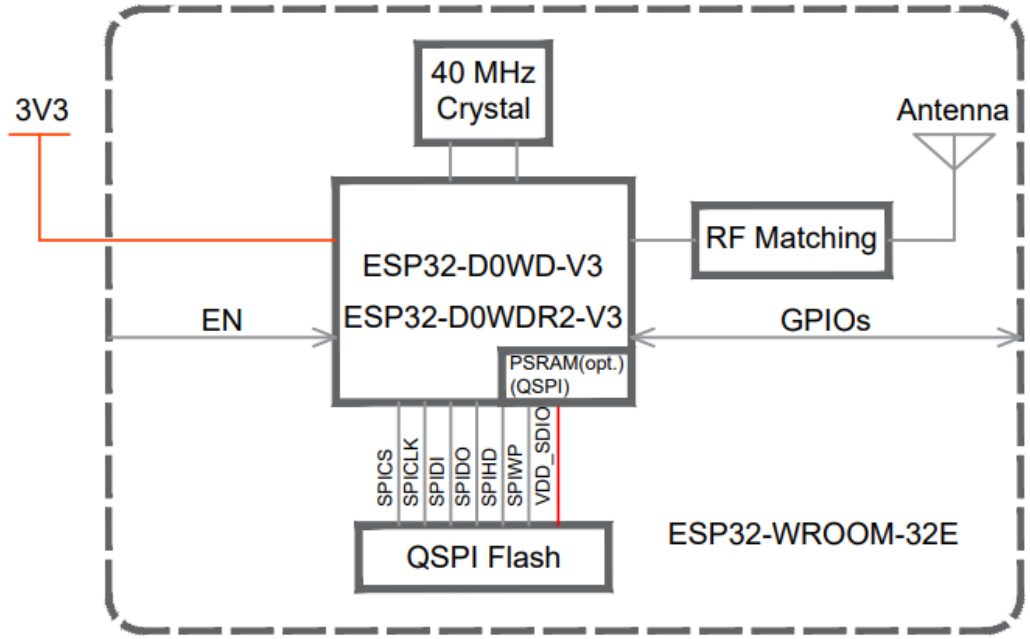

What is ESP32:

- Wireless connectivity (Wi-Fi, Bluetooth)
- 32-bit dual-core Xtensa LX6, 240 MHz
- Ethernet MAC, CAN-compatible controller (TWAI)
- UART, SPI, I2C, I2S, 12-bit ADC, 8-bit DAC…
- 520 KB SRAM, 448 KB ROM
- 28 GPIOs (but only 26 in ESP32 module) and +6 reserved for Flash
- Low price 1-2 Euro per chip

What is ESP32:

- Open-source ESP-IDF
- Espressif IDE
- Supported by Arduino IDE
- Extensions for VS Code, Eclipse

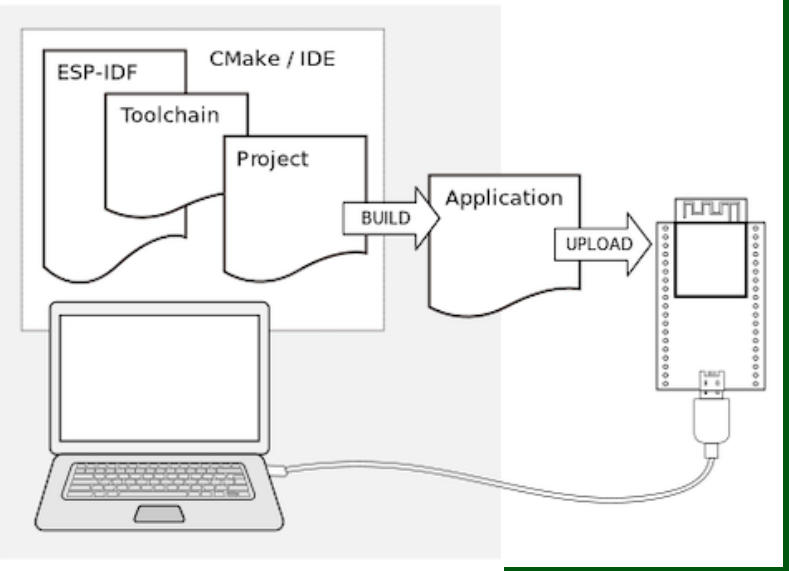

ESP-IDF

IoT Development Framework

Network Provisioning	OTA Upgrade Library	Manufacturing Utilities	Common Networking Protocols	Examples	
File Systems	Object Storage	POSIX and C++ Support	Network Security	Crypto Library	IDE Plugins
Peripherals Drivers	Power Management	Wi-Fi & Bluetooth LE Mesh Networking	TCP/IP Stack	Bluetooth/Bluetooth LE Stack	Build System
RTOS Kernel	SoC Support	Software Bootloader	Wi-Fi MAC Library	Bluetooth Controller	Developer Tools

What is ESP32:

Minimum longevity commitment for ESP32 is 15 years starting from 2016.

Xtensa 32-bit LX7 dual/single-core, up to 240 MHz

RISC-V 32-bit single-core, up to 160 MHz

Current situation

~10 ESP32-POE-ISO boards are spread at the facility within a couple of months.

Used at beamlines for reading sensors and simple logic implementation.

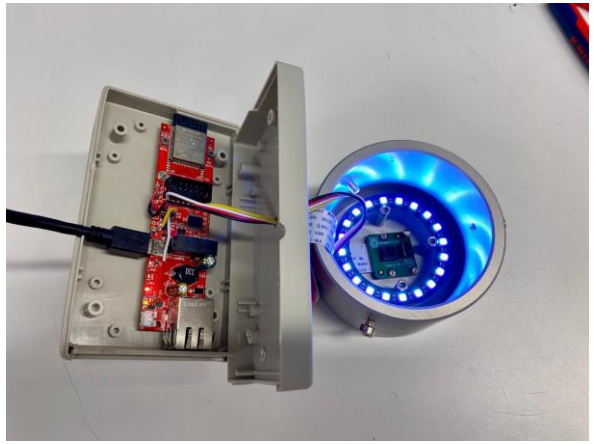

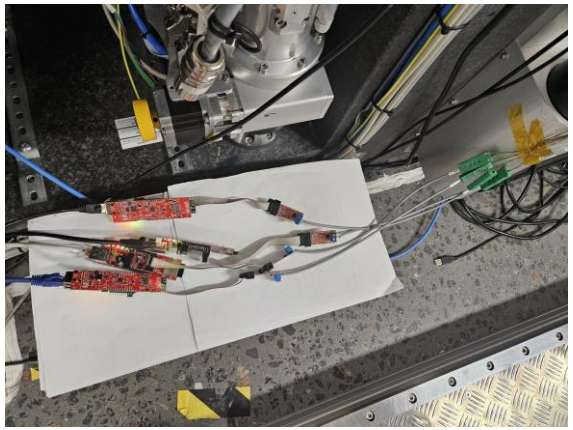

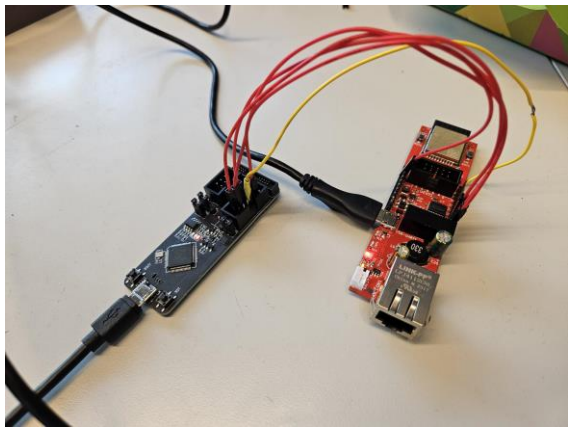

Two ways of designing

New task

Specific ESP32 firmware

Specific Tango Device

New task

Generic ESP32 firmware

Generic Tango Device

Main points

- Settings can be sent with JSON messages over MQTT
- Protocol - to be implemented on ESP32 and Tango Device
- ESP32 firmware upgrade via OTA
- FreeRTOS (for using two cores, at least)

To standardize the approach in the end.

Considerations (ESP32-POE-ISO)

- Might need more GPIO and level shifters
- Might need external power
- No JTAG on the board

- Might need to make our own board
- Or find similar on the market
- Might need to change microcontroller at all

Plan

To make a plan…

- Choose IDE
- Choose module or board
- Test software features which are available
- Start developing protocol

MAX IV

Links

- **ESP32-POE-ISO** board

ESP32-POE-ISO - Open Source Hardware Board (olimex.com)

- **ESP32** datasheet

esp32_datasheet_en.pdf (espressif.com)

- **ESP32** technical manual

esp32_technical_reference_manual_en.pdf (espressif.com)

- **ESP32-WROOM-32E** datasheet

esp32-wroom-32e_esp32-wroom-32ue_datasheet_en.pdf (espressif.com)